1766096PCOM(1766196PCOM 1766396PCOM 1766496PCOM 1766893PCOM)
CARSON FIREPLACE TV STAND

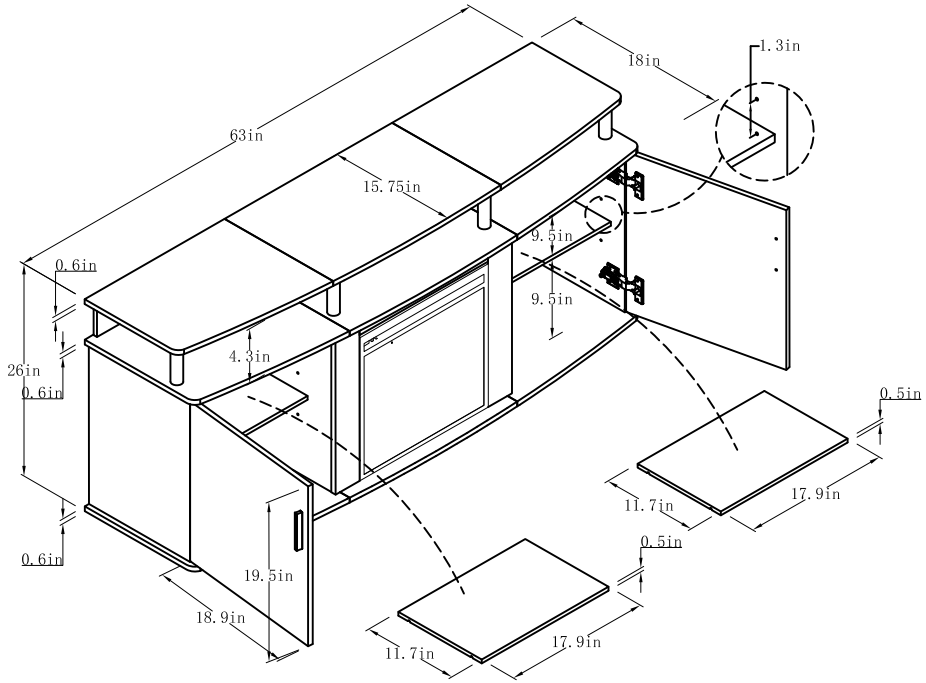

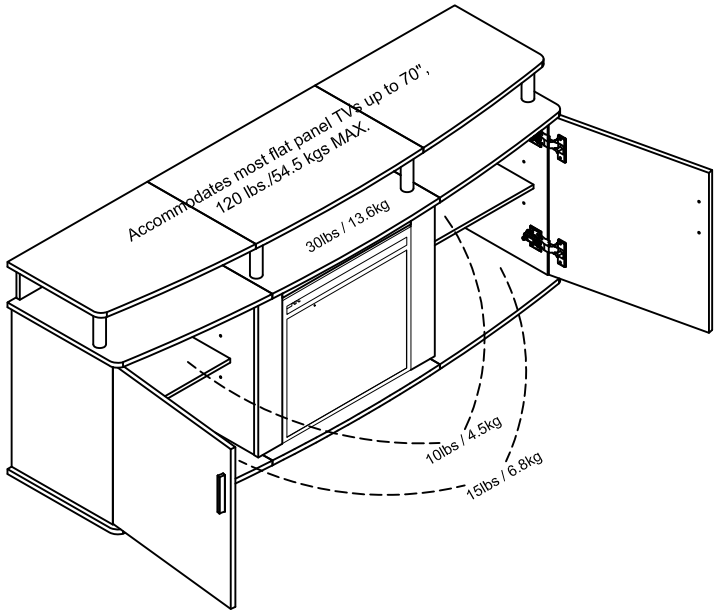

Wood Breakdown:
MDF 0%, PB 95%.
Total storage: 7.57 cubic feet

Overall Product Size:
63" W × 18 D × 26" H
160.2cm W × 45.7cm D ×66cm H

Maximum Weight Capacities
Unit Weight:115.94lbs. (52.7kg)